FORTY3 FOS09BI

CE EN 14528:2007

GLOBO
Inspired by Life

Cod. **FOS09BI**

Wall-hung bidet 57.36 h29 cm. Fixing kit included. Weight 19 Kg



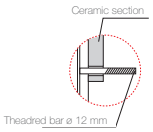

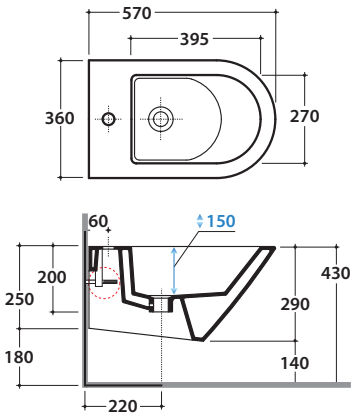

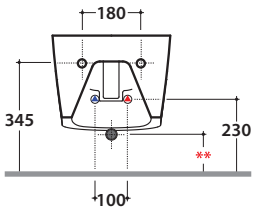

BATAFORM®

CERASLIDE®

** For installation with:
Siphon "S"-140 mm
Siphon SF052- 120 mm

Cod. **FI012BI**

Push open valve drain with ceramic top for basins with overflow. Weight 0,5 Kg



Cod. **FI012CR**

Push open chromed valve drain for basins with overflow. Weight 0,5 Kg



Cod. **PU001**

Acoustic and crash protection.



Cod. **FI002**

Fixing brackets for W/H sanitary. Weight 2,5 Kg



CE EN 14528:2007

GLOBO
Inspired by Life

Tips for proper cleaning

Ceramic cleaning

We recommend the use of warm water in combination with non-abrasive cleaning products

Click to view or download

DOP N° B001-01

Assembly instructions wall-hung sanitary ware

Video instructions wall-hung sanitary ware

CERASLIDE®

Is the result of years of research, on the glazes and the ceramic application, that ensures more protection, more resistance and ease of cleaning. The careful control of temperatures in the various cooking stages, in a cycle that can last up to 26 hours, ensures perfect homogeneity of the product during the sintering process, reducing porosity and guaranteeing greater resistance against stains, dirt and abrasions.

BATAFORM®

The antibacterial bataform treatment was developed to ensure deeper hygiene, basing its effectiveness on the reaction of silver ions, which inhibit the proliferation of bacteria. tests carried out by certified laboratories, according to the uni4543 standard, have confirmed a drastic decrease in the presence of bacteria, without however altering the glossy glaze. for cleaning operations, follow the recommendations given for the ceraslide glaze.