THERMOSTATIC SHOWER CONCEALED VALVE- TWIN WITH DIVERTER & TRIPLE WITH DIVERTER INSTALLATION





INSTALLATION INSTRUCTIONS

INTRODUCTION

This thermostatic valve is suitable for use with all water systems with an operating pressure of 2-5 bar (beyond which , we recommend pressure-reducing valves to be fitted).

The triple thermostatic valve has three outlets, two of which can be controlled simultaneously.

The outlets allow for additional fittings (eg. body jets, hand shower) to benefit from thermostatically controlled supply.

PARTS IDENTIFICATION

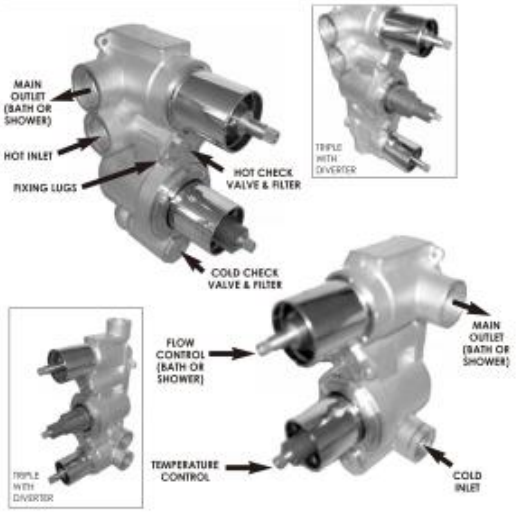

DIMENSIONS

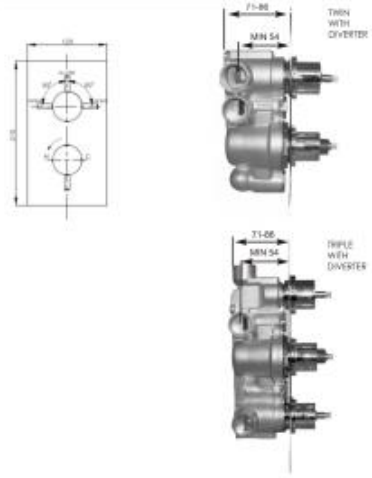

TMV APPROVED INSTALLATIONS

This thermostatic valve has been designed to be compliant with the requirements of TMV2.

No liability for installation costs will be accepted if, for example, the tiling is too close to the body of the valve or expanding foam is used, thus preventing the marking on the valve being visible. Once the inspection has been carried out, the cover plate can be fitted.

NOTE: all dimensions shown are in millimetres.

INSTALLATION





NOTES:

Please read these instructions carefully and keep in a safe place for future reference. The installation must comply with all Local/National Water Supply Authority Regulations/Bye laws and Building and Plumbing Regulations (UK: BS6700). This valve is a mixing device and therefore requires the water supplies to be reasonably balanced, otherwise we recommend a pressure reducing valve to be fitted.

The valve is fitted with integral WRC approved single check valve cartridges which command the water supply, therefore the thermostatic valve is protected against cross-flow due to unbalanced line pressures as required by the Water Supply (Water Fittings) Regulations 1999.

Fittings isolating valves to the inlet feeds is recommended for ease of maintenance.

INSTALLATION

⚠ **Remember to turn off the mains water supply before connecting to any Existing pipe work.**
Warning! Please check for any hidden pipes and cables before drilling holes in the wall.

Position the valve onto the wall and mark the position of the fixing lugs (x3). Make sure the valve is set back from the front face of the wall by the appropriate depth to allow for plasterboard, filling and tiling etc.

Mount casting to the wall using suitable fixings.

Always leave access to the four front cartridges for servicing.

Inlets and outlets are all tapped 3/4" BSP. Make all pipe work connections using a proprietary thread sealer.

Do not use tapered threaded adaptors.

Turn on supplies and test all connections for water tightness.

Remove Hot and Cold check valves and flush out the installation, clean the filters and re-fit.

Apply a narrow bead of clear silicone sealant around the back edge of the cover plate and carefully press into position.

MAINTENANCE

Note: to avoid any damage, please remove all chrome parts before any maintenance takes place.

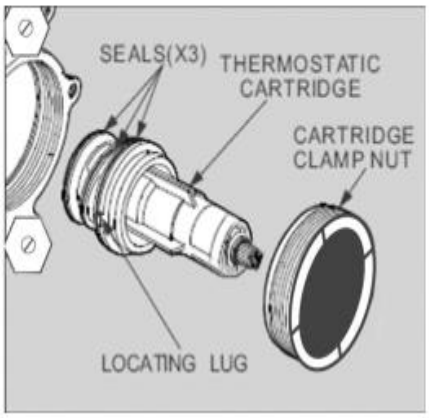

THERMOSTATIC CARTRIDGES

The concealed thermostatic valve should give trouble-free service, but in the event of failure, servicing is straightforward.

To remove the thermostatic cartridge

Undo the cartridge clamp nut (take note of the orientation of the cartridge) and pull the cartridge out using the temperature control knob to aid removal. Wash the cartridge with clean running water and make sure that any trapped debris has been removed. Dry and lightly grease the seals (only use silicone grease) and replace the cartridge, making sure that the locating lug is located in the recess on the hot side of the valve.

FLOW CONTROL CARTRIDGE

The flow control cartridge uses ceramic discs, which normally last indefinitely unless debris manages to get between them. Wash the cartridge with clean running water, dry and lightly grease the seal.

MAINTENANCE

FILTERS/CHECK VALVES

The check valves stop cross flow between the hot and cold water supplies.

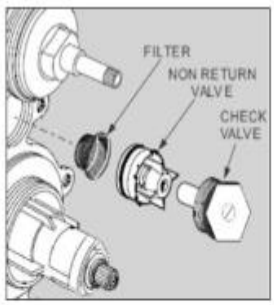

To clean the Check Valves

Undo and remove the check valve. Using a pair of pliers, remove the Non return valve and filter. Wash the filter with clean running water, dry and lightly grease the seals.

CARE OF YOUR SHOWER VALVE

We recommend cleaning the valves with a soft damp cloth.
We strongly advise against the use of ALL cleaning products.

TROUBLE SHOOTING

SYMPTOM	SOLUTION
After installation, the shower runs HOT or COLD and will not mix	Hot and cold water supplies are plumbed the wrong way round. Remove the thermostatic cartridge, undo the clamp nut and pull the cartridge out (using the temperature control knob to aid removal). Re-install with the locating lug pointing away from the inlets
Shower will not run hot enough when first installed	Maximum temperature needs adjusting
Cold water tracking through the valve into the hot water system	Check and clean the check valve cartridges and filters, located under the check valves
Very low flow or no flow (gravity)	Check hot and cold feeds (the valve will shut down if either hot or cold water supply fails)