Version: 230921 Rev: A/AF

IMPERIAL

BRINGING BATHROOMS TO LIFE, FOR LIFE

Lichfield	High Level WC Pan

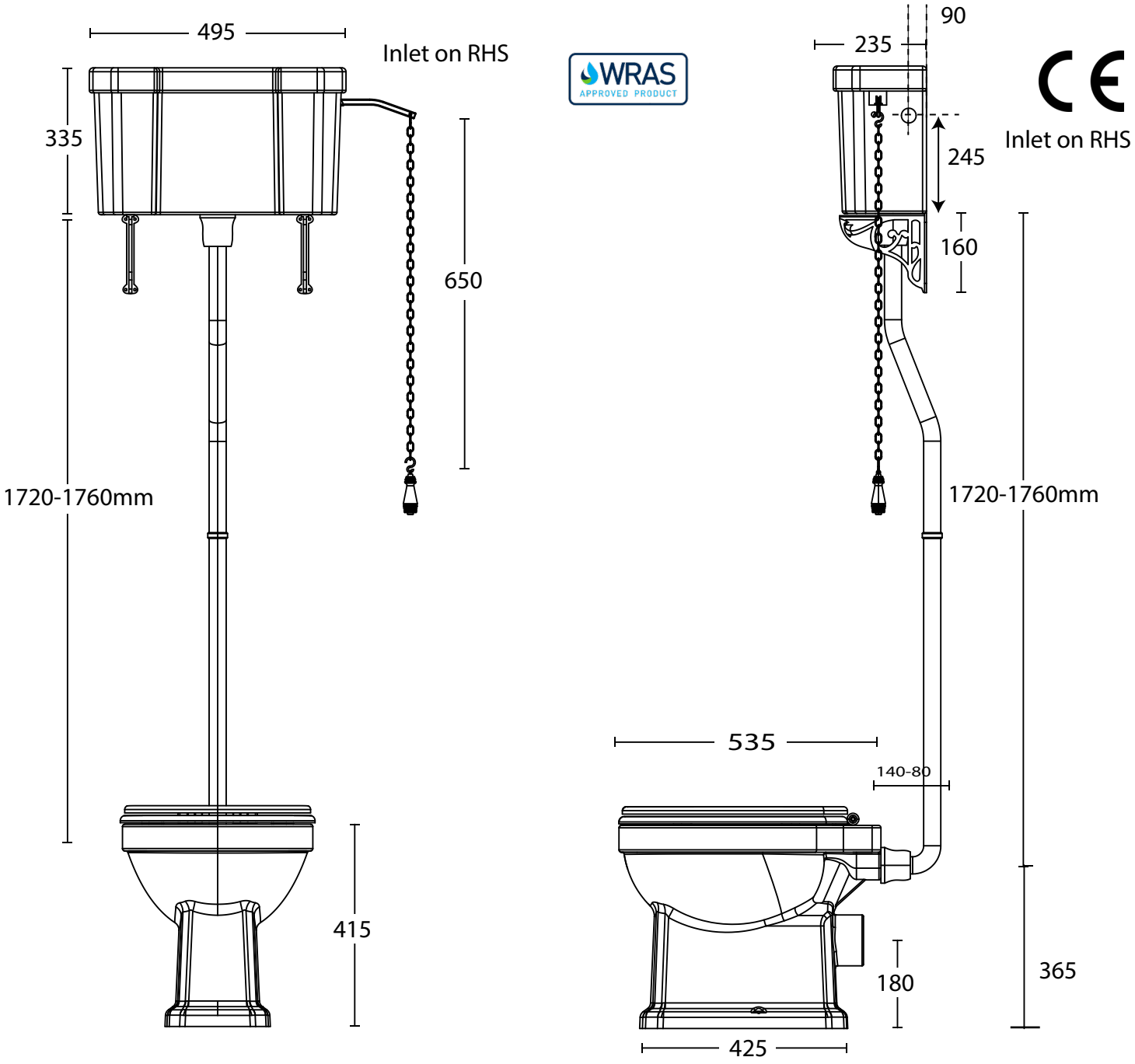

DRAWING NOT TO SCALE - DO NOT MEASURE FROM THIS TECH SPEC

We recommend that all products are purchased with the assistance of a specialist bathroom retailer and always installed by an experienced installer who is a member of a recognised association. All sizes quoted are nominal : items may vary by +/- 2% against the figures quoted. When planning installations where dimensions are critical, it is essential that the space allowed for the individual items is physically checked. IBC Products LTD cannot be held liable for any costs associated with items not fitting in any given area. The contents of this statement are based on information correct at the time of publication. We reserve the right to make alterations in product characteristic, fixing, packagine, operation etc. at any time without notice.

For further information on fitting guidelines, Terms and Conditions and Warranty details please refer to the Design guide or contact Imperial's Customer Service Team on 08706061623 or sales@imperial-bathrooms.co.uk

Copyright IBC Products LTD 2023. All Rights reserved

IMPERIAL

BRINGING BATHROOMS TO LIFE, FOR LIFE

Lichfield	High Level WC Pan

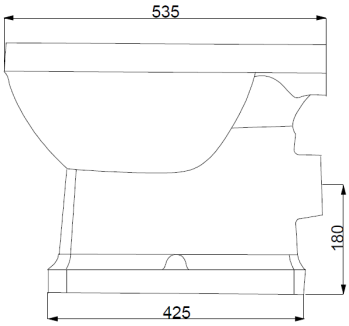

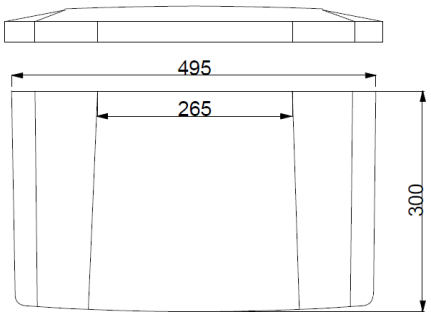

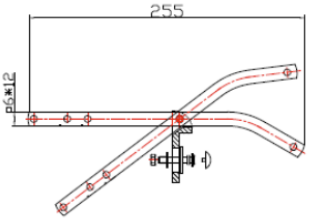





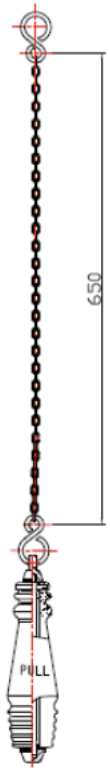

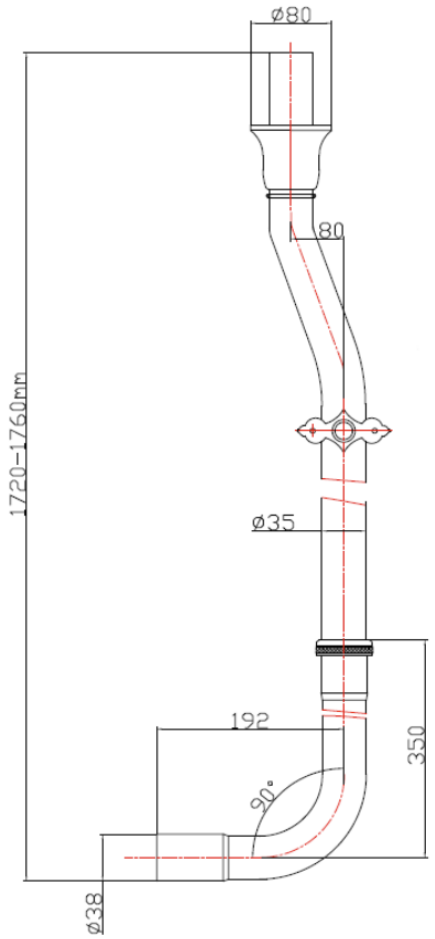

DRAWING NOT TO SCALE - DO NOT MEASURE FROM THIS TECH SPEC

We recommend that all products are purchased with the assistance of a specialist bathroom retailer and always installed by an experienced installer who is a member of a recognised association. All sizes quoted are nominal : items may vary by +/- 2% against the figures quoted. When planning installations where dimensions are critical, it is essential that the space allowed for the individual items is physically checked. IBC Products LTD cannot be held liable for any costs associated with items not fitting in any given area. The contents of this statement are based on information correct at the time of publication. We reserve the right to make alterations in product characteristic, fixing, packagine, operation etc. at any time without notice.

For further information on fitting guidelines, Terms and Conditions and Warranty details please refer to the Design guide or contact Imperial's Customer Service Team on 08706061623 or sales@imperial-bathrooms.co.uk

Copyright IBC Products LTD 2023. All Rights reserved