INSTRUCT28
REV151102 B/MM

IMPERIAL

Low level flush pipe kit installation instructions

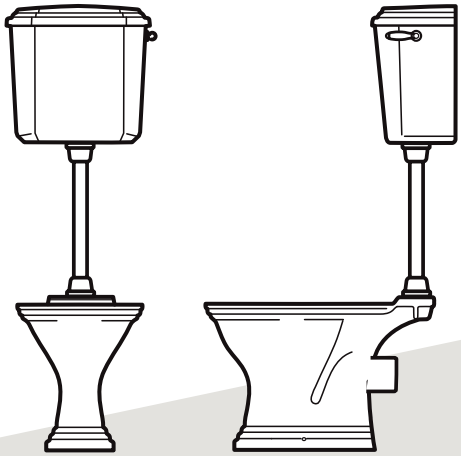

Important Information:
Please check the products for transport damage and that contents are complete before installation.
Consult a qualified plumber if you have any problems installing this product.
Complaints made following installation regarding the above cannot be accepted.

Thank you for purchasing this Imperial product.
These instructions relate to our close coupled, high level and low level toilets.
Before you start check you have the necessary tools for installation.

⚠ Before you begin:
Always handle our products with care and attention. Ceramic products are brittle, and may chip, crack or break if not handled carefully. Broken ceramic is extremely sharp.
Take care not to over tighten screws and fittings. Over tightening may lead to breaks or chips in the ceramic.
Before installing the product, please inspect for damage incurred during transport. Imperial can not take responsibility for damaged products after or during their installation.
We recommend that the guidance of a qualified plumber is sought throughout the installation process.
Always observe the plumbing and building regulations in the area the product is being installed in.

Imperial reserves the right to amend the design of its products without notice, as specified in the company catalogue.

TOOLS AND FITTINGS:

The following tools are neccessary for the installation of this product.
Imperial would once again recommend that a qualified plumber carry out the installation of this product.


Hand Held Drill


Safety Goggles


Spirit Level


Tape Measure


Pencil


Spanner


Hacksaw


File

Copyright © The Imperial Bathroom Company Limited 2015. All rights reserved

Install pan as directed in installation instructions provided with the ceramic product.

	Parts	qty
a	Rubber Component	X1
b	Plastic Nut	X1
c	Shroud	X1
d	Rubber O ring	X1
e	Pipe	X1

*supplied with siphon pack

	Parts	qty
a	Rubber Washer	X1
b	Plastic Nut	X1
c	Shroud	X1
d	Rubber O ring	X1
e	Pipe	X1
f	Lower Shroud	X1

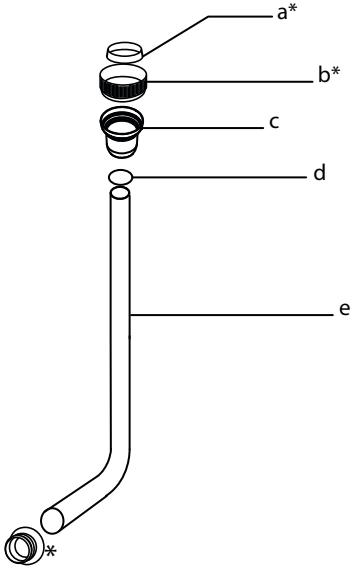

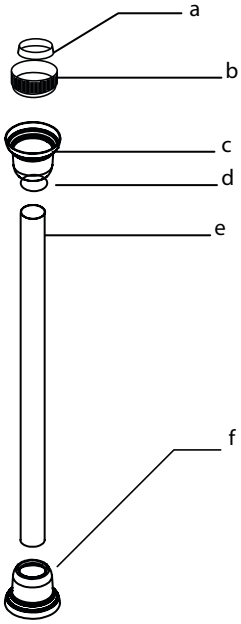

Copyright © The Imperial Bathroom Company Limited 2015. All rights reserved

Install cistern and fittings as descrbed in ceramic installation instruction. Assemble the components onto the top pipe as shown below and tighten the plastic nut onto the siphon.

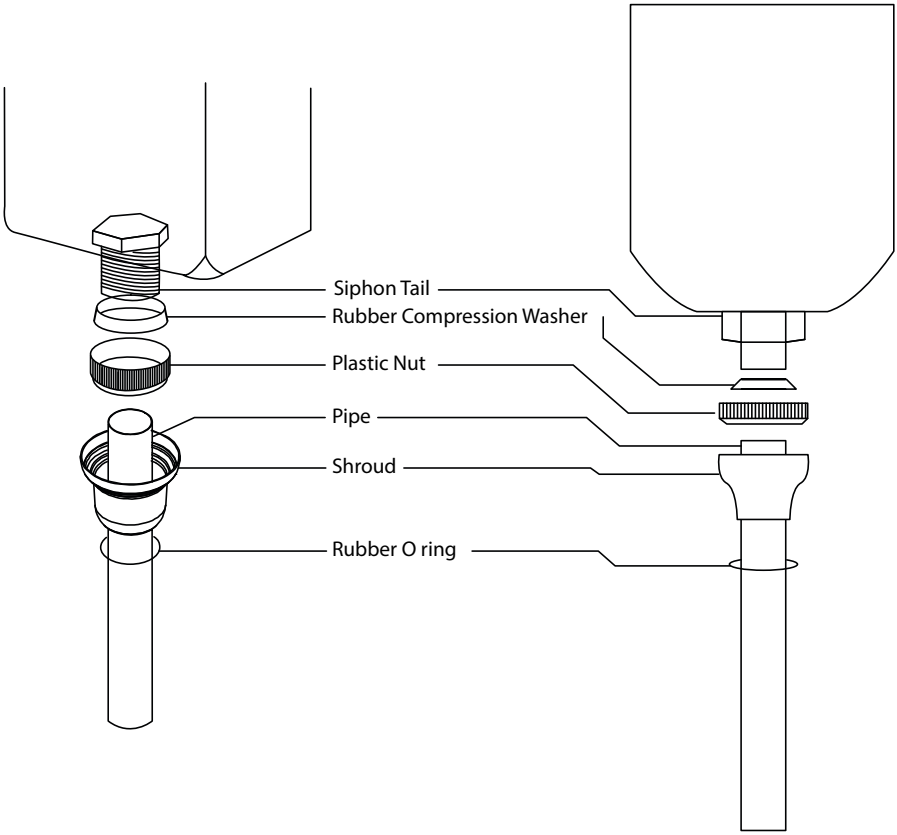

If necessary the pipe can be trimmed to suit. If trimming please ensure that a suitable pipe slicer is used and all burrs are carefully removed with a file.

Copyright © The Imperial Bathroom Company Limited 2015. All rights reserved

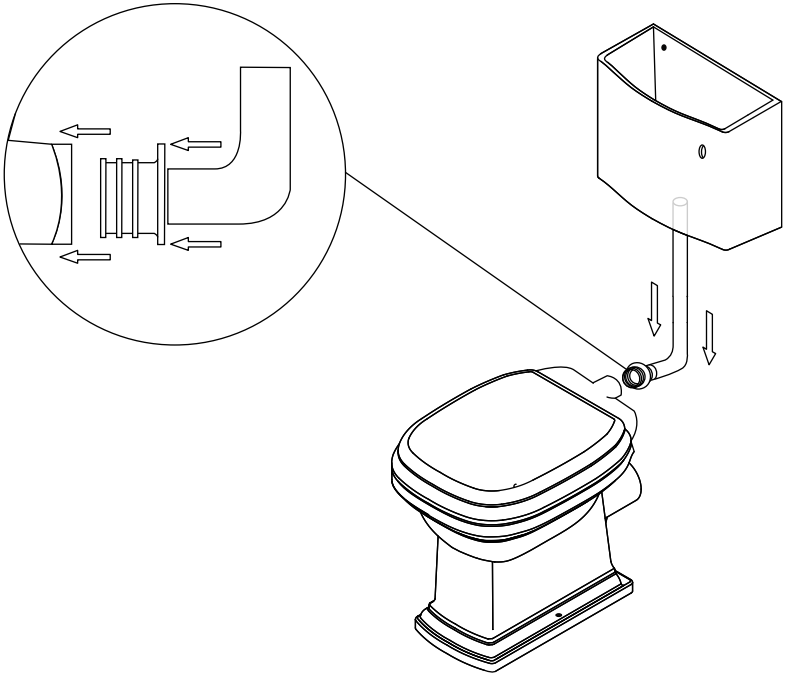

After assembling the cistern and the pipe please connect the cistern to the pan by doing the following.

1) Push the plastic grommet into the rear of the pan.
2) Carefully insert the pipe taking care not to push it in to far.
3) Pushing the pipe into the pan too far can impeed the flow of water and result in poor flushing performance.
4) Operate the flush a few times and check for leaks.
5) This completes the installation of your Low Level WC pan

Copyright © The Imperial Bathroom Company Limited 2015. All rights reserved

Install the cistern and fittings as directed in ceramic instructions.
Install pipe to cistern as described previously.

Assemble the translucent plastic (neoprene) grommet with the black donut shaped sealing gasket. Insert the grommet from the flat side of the gasket so that the largest flange locates firmly on the rebate inside the gasket. Insert the end of the flushpipe through the decrative shroud and then through the centre hole located on the top of the ceramic cover plate. Then insert the flush pipe through the plastic grommit from the flat side of the sealing gasket.

Do not push the flushpipe beyond the end of the three exposed flanges of the grommet. To do so will affect the water flow (i).
Secure the cover plate over the pipe and gasket assembly using the decorative bolts and wing nuts supplied. Care should be taken not to over-tighten the wingnut (ii).
The decorative shroud should be fixed in position on the ceramic cover plate of the pipe.

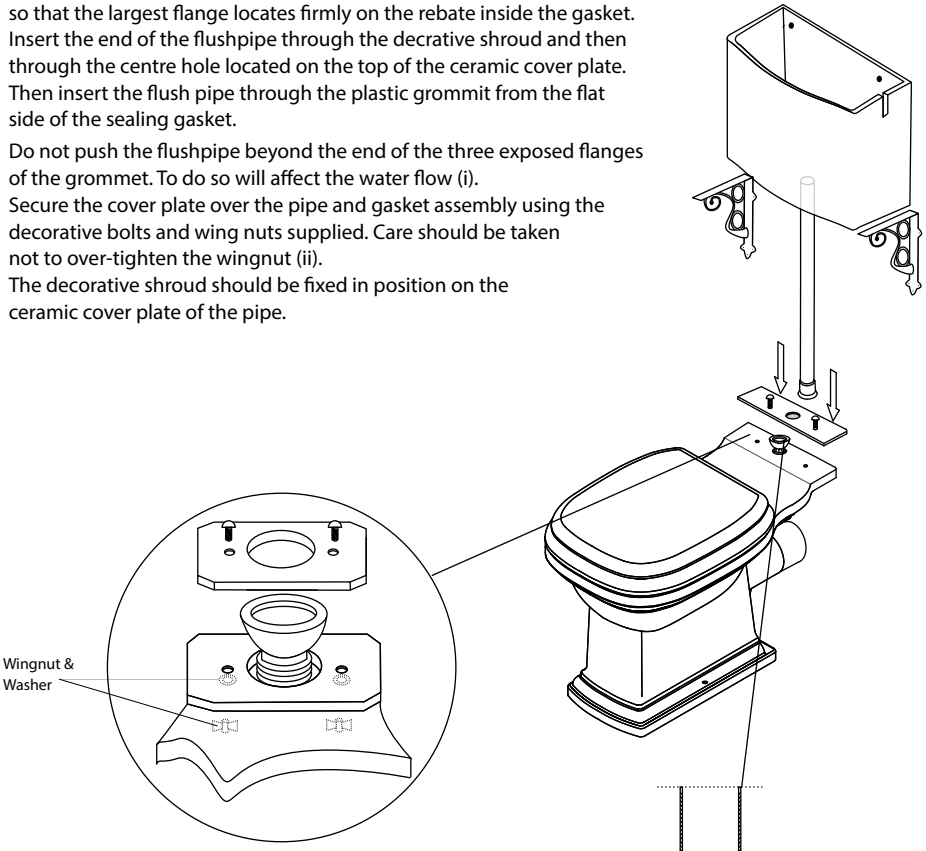

*Astoria Deco diagram

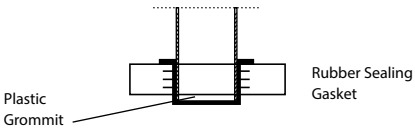

Flush Pipe Must Not Exceed
Beyond The End Of Plastic Grommit

* For use if fitting Astoria Deco L/L or H/L

Copyright © The Imperial Bathroom Company Limited 2015. All rights reserved