Cone shower combination 06
ceiling shower combination, stainless steel, with ceiling shower, mixer two way valve and hand shower

Cone douche combinatie 06
plafonddouche combinatie, rvs, met plafonddouche, wand mengkraan 2 weg en wand handdouche

900-6460 / 900-6466

installation

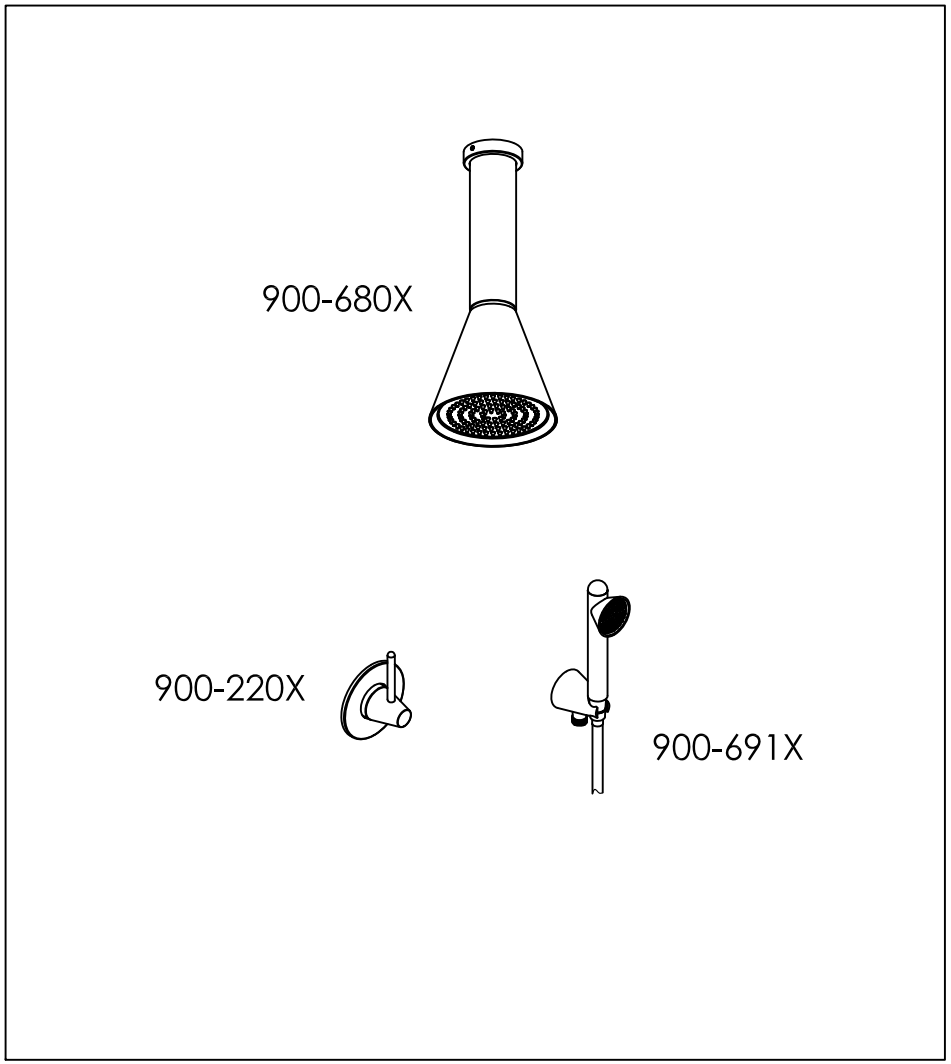

technical diagram

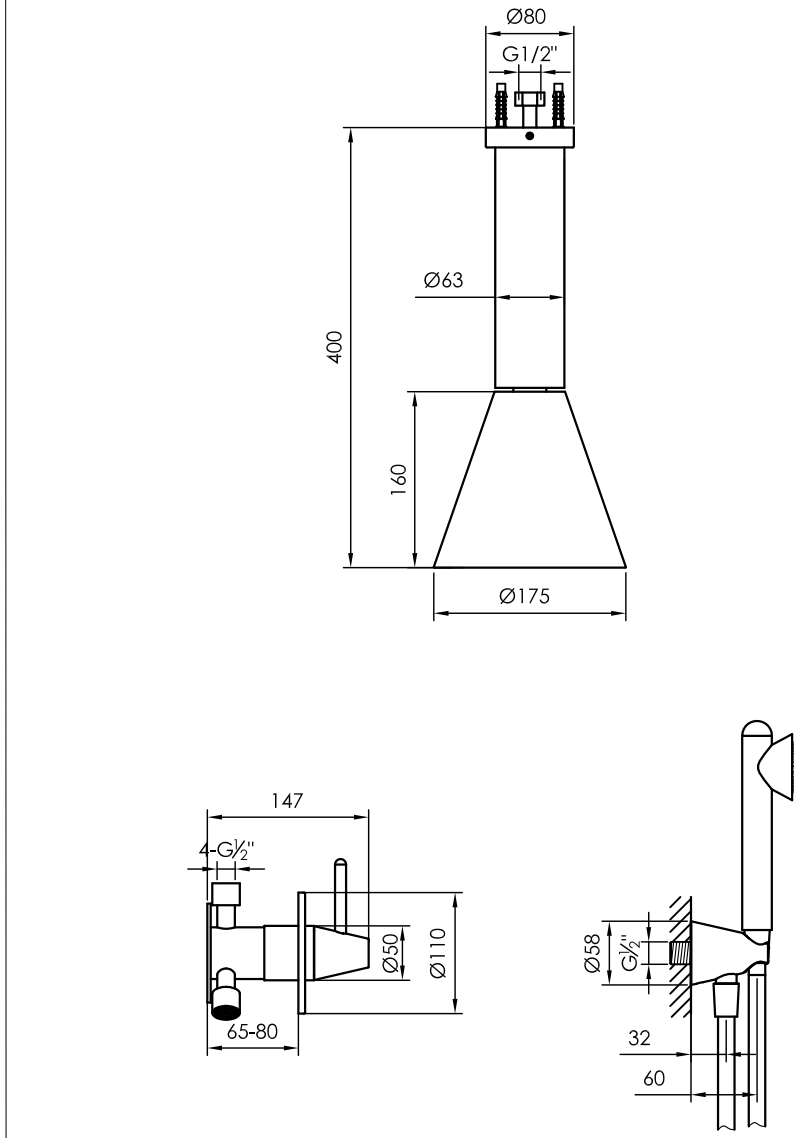

JEE-O

Cone ceiling mounted shower, stainless steel

Cone plafonddouche, rvs

900-6800 / 900-6806

installation

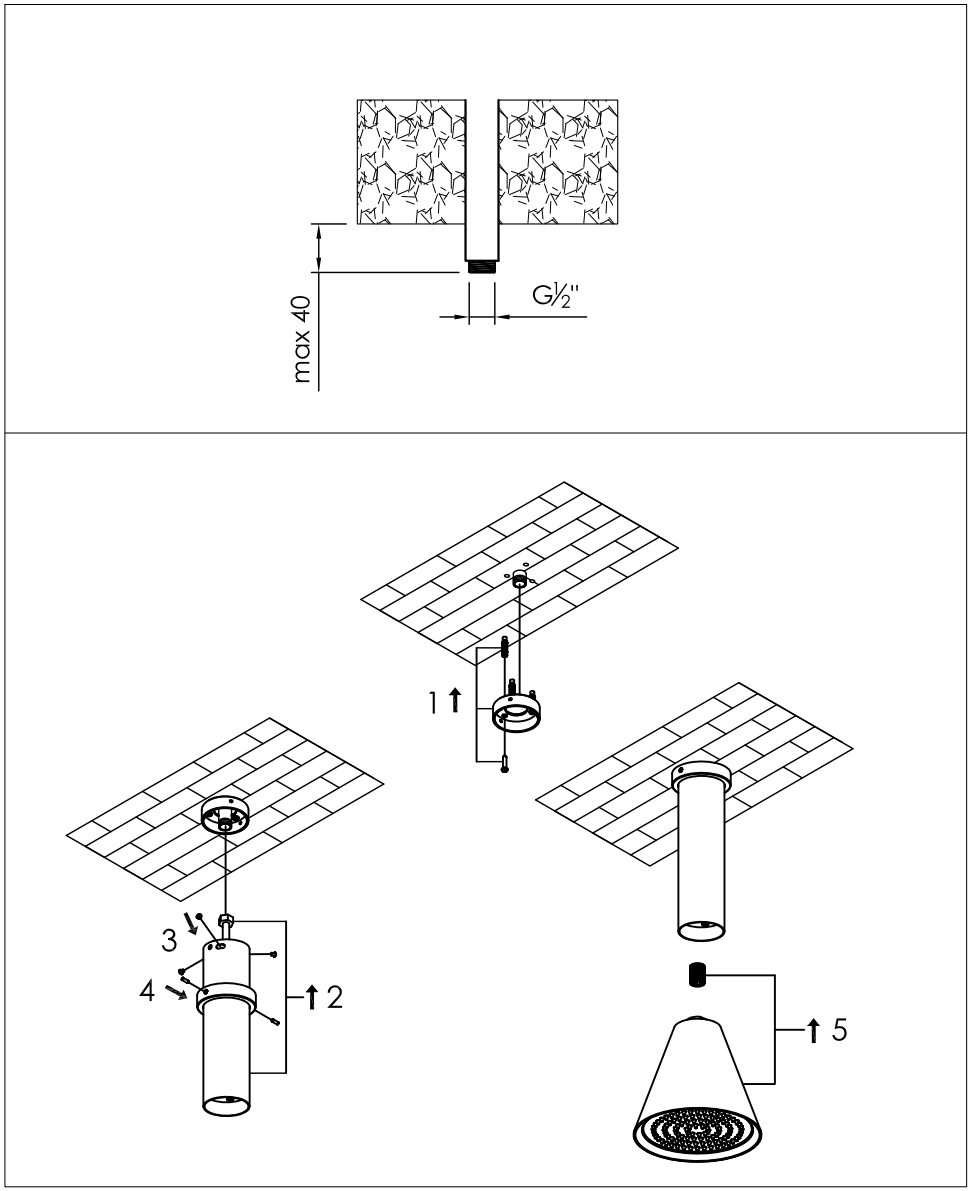

technical diagram

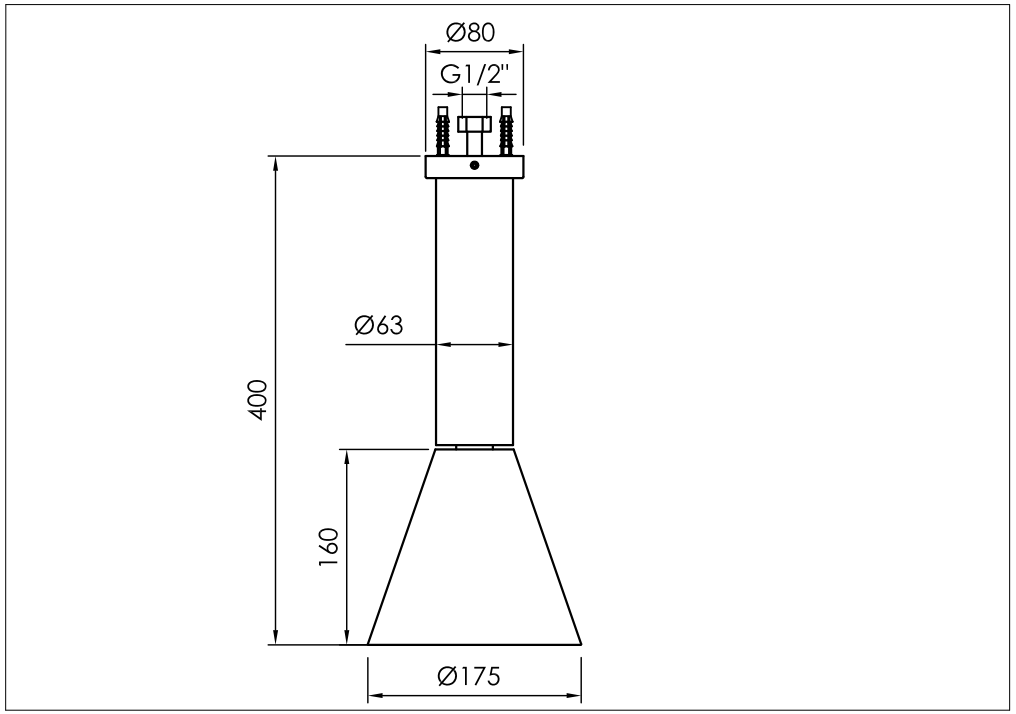

explosion diagram

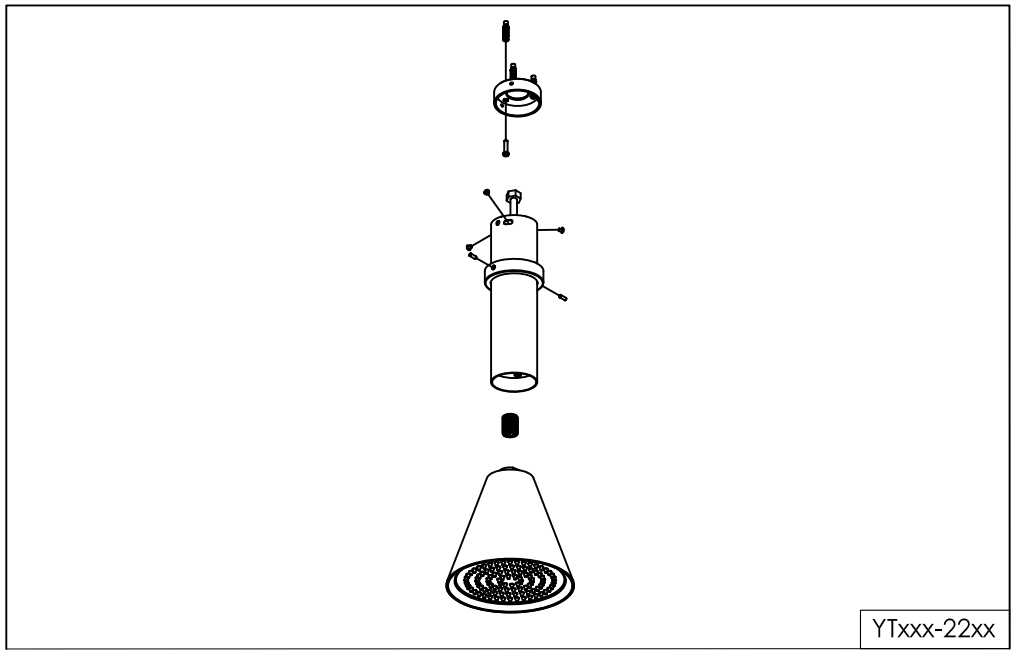

YTxxx-22xx

www.jee-o.com

wall mounted hand shower set stainless steel
with integrated wall elbow

wand handdouche rvs met geïntegreerde houder

900-6910 / 900-6916

installation

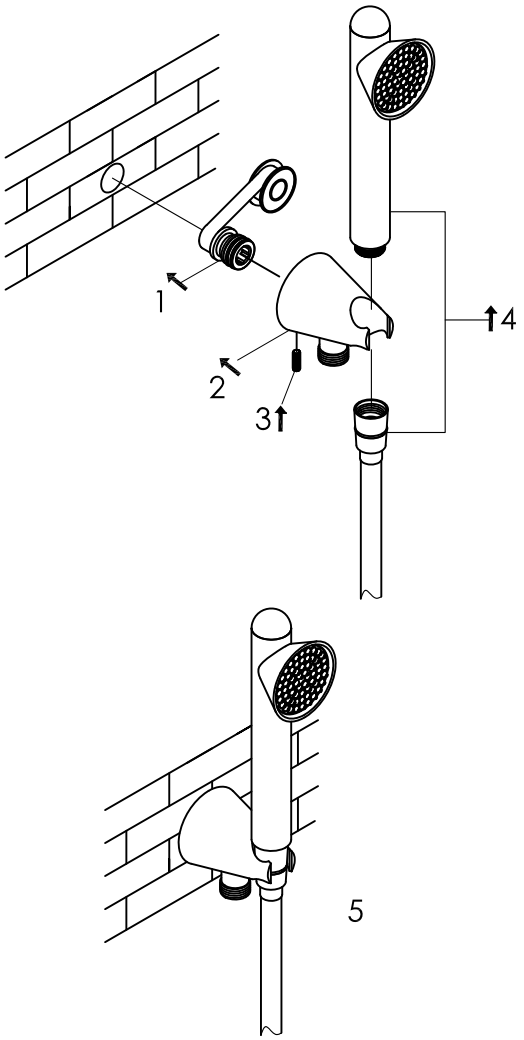

technical diagram

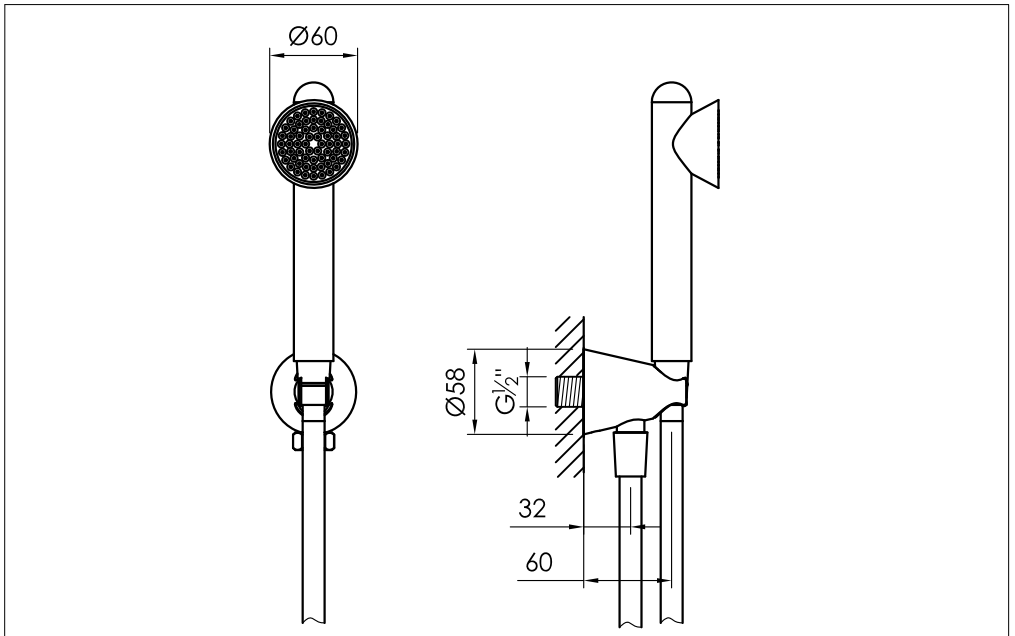

explosion diagram

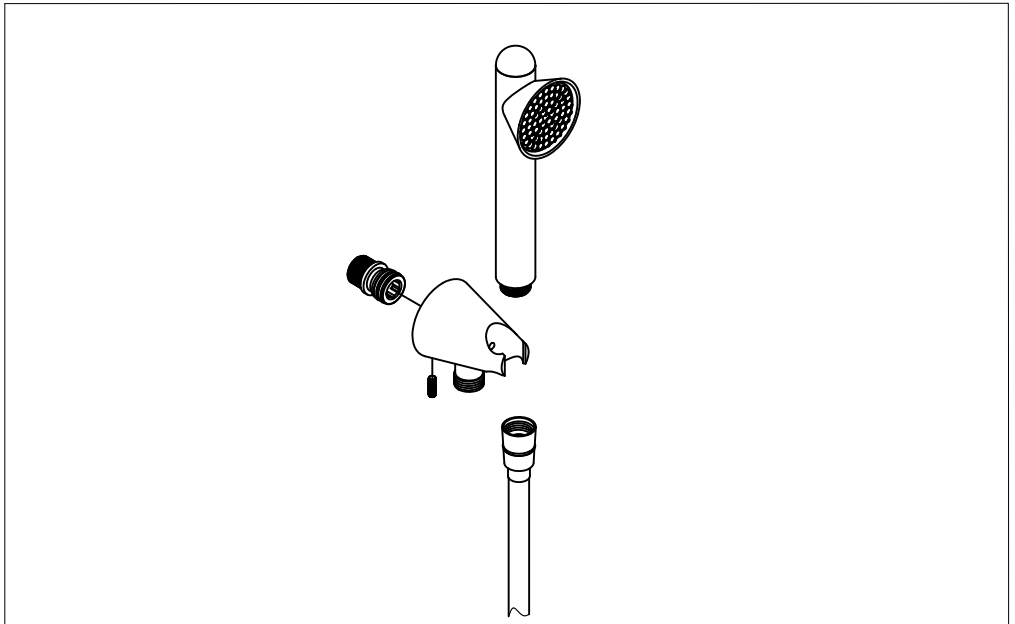

YTxxx-22xx

Cone wall mounted mixer stainless steel with progressive cartridge and concealed body

Cone wand omsteller rvs met inbouwdeel en progressieve cartridge

installation 900-2200 / 900-2206

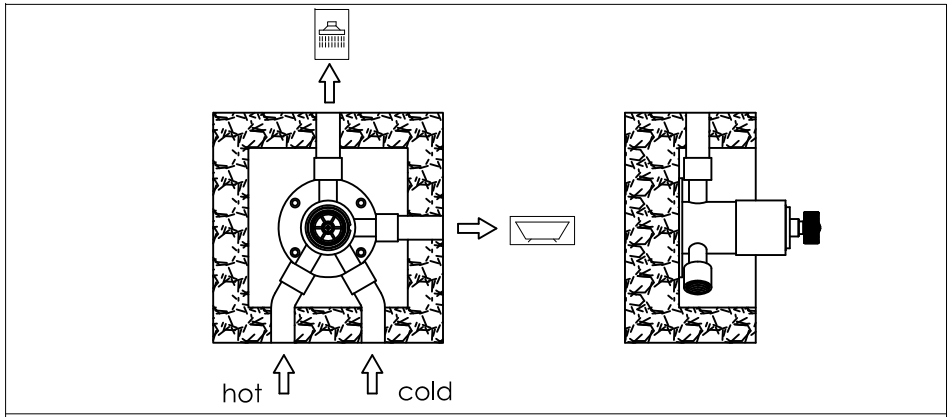

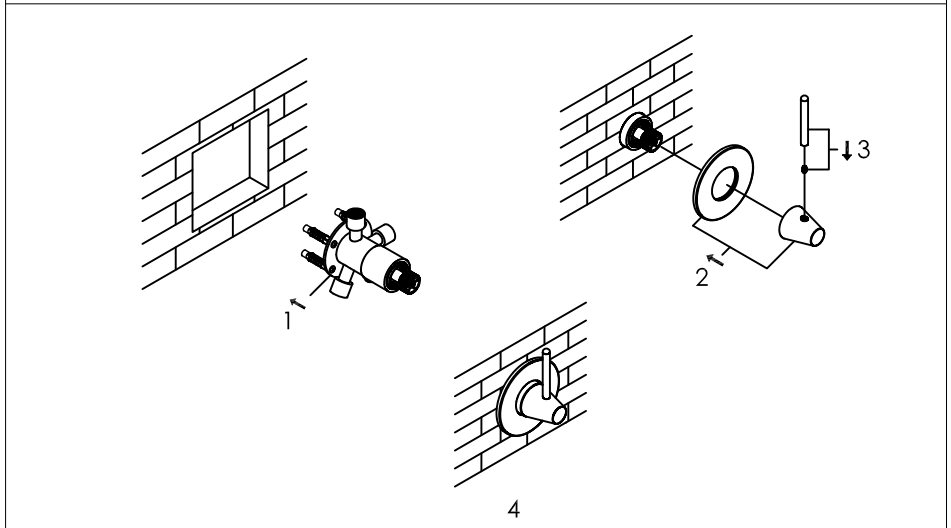

LEFT SHOWER HEAD	MIDDLE OFF	RIGHT BATHTUB
MAX 90°		MAX 90°

technical diagram

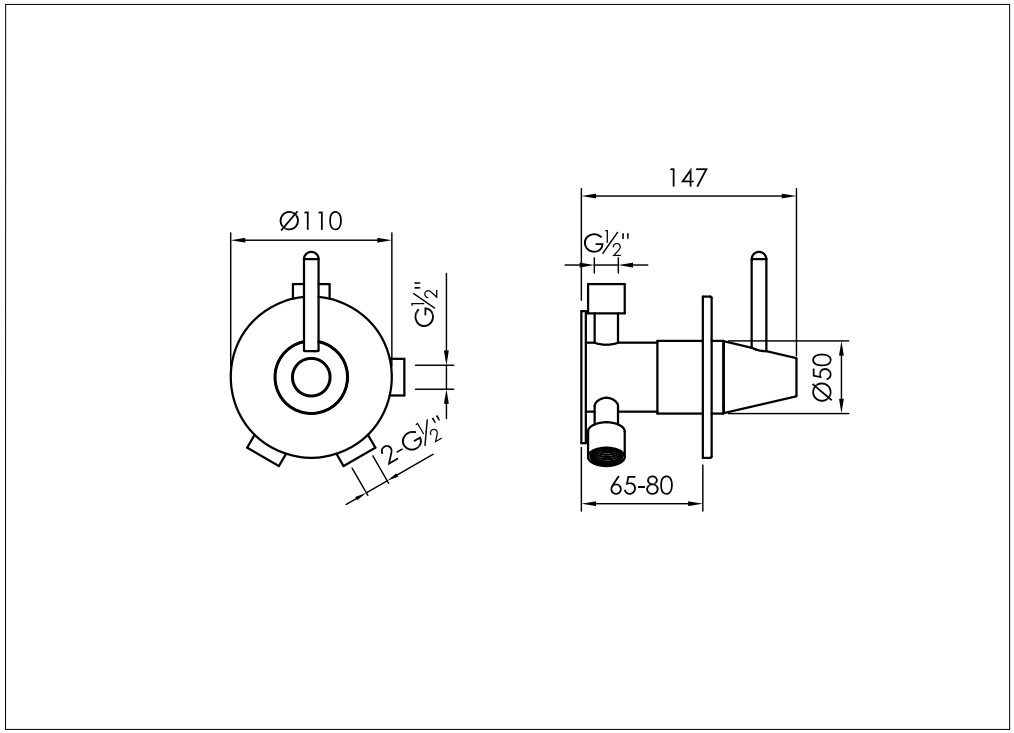

explosion diagram

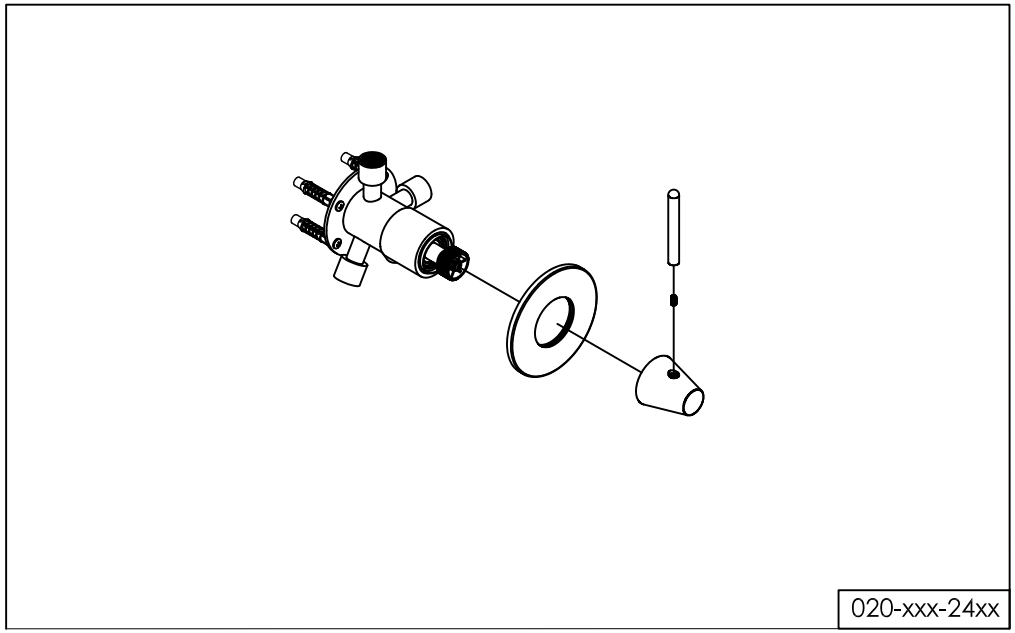

020-xxx-24xx