Sage basin

DADO
creations europe

made from DADO® quartz

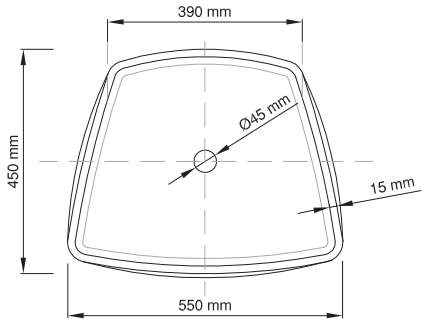





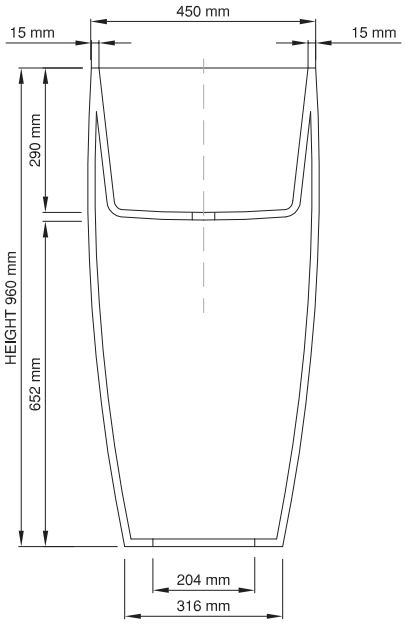

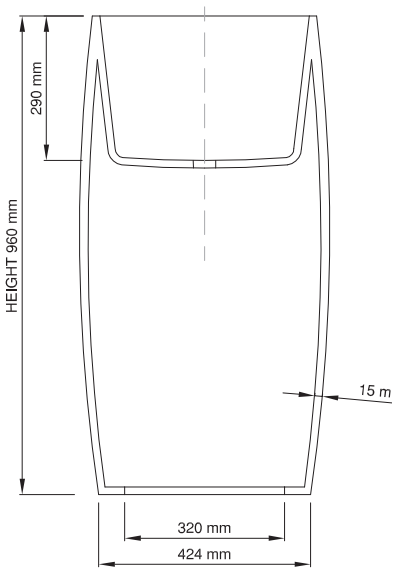

Product code:	DDC10.1

Size (L x W x H):	550 x 450 x 960 mm	Base dimensions (L x W):	424 x 316 mm
Top to waste:	290 mm	Rim width:	15 mm
Overflow:	No overflow	Waste diameter:	45 mm
Material:	DADOquartz	Weight:	52 kg
Colour:	White	Packing dimension (L x W x H):	575 x 575 x 1070 mm
Finish:	Matte	Shipping mass:	25 kg
		HS code:	68109900

25 year warranty – The general conditions can be found on our website: www.dadocreationseurope.com/downloads

CE

The manufacturer pursues a policy of continual development and improvement and as such product specifications may be changed. All dimensions listed herein are only intended as a guide. Cast products are subject to size variants of +/- 5%. The exact colour and finish of the products may vary from those depicted in brochures and website. Full warranty terms and conditions available on the Dado Creations Europe website.