JEE-O cone ceiling shower

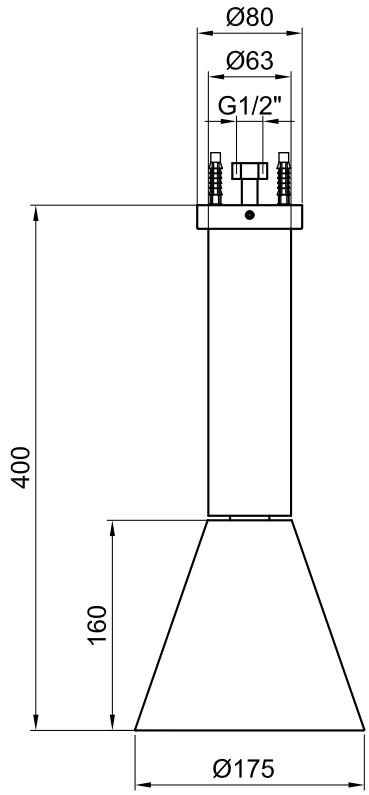



Article code:	900-6800 Brushed 900-6806 PVD coated gun metal
Material:	Stainless Steel r316
Cleaning instructions:	download JEE-O shower and taps manual on our website: www.jee-o.com
Flow at water of 38°C:	12l p/m at 3Bar pressure
Pressure:	Recommended working pressure 3Bar

Connection:	G ½" (ø15mm / 0.6")
Thread:	British Standard Pipe (BSP)
Dimension package:	L 50 x W 28 x H 22 cm
Total weight:	3.8 kg
Package weight:	1.2 kg

7 year warranty – The general conditions can be found on our website: www.jee-o.com/downloads

HS code: 84248970

Models are subject to change and specs may contain typographical errors
Slight variations in the aesthetic appearance of the product, including the color, may occur after exposure to external influences such as sunlight, pollution or harmful chemicals

JEE-O cone wall hand shower

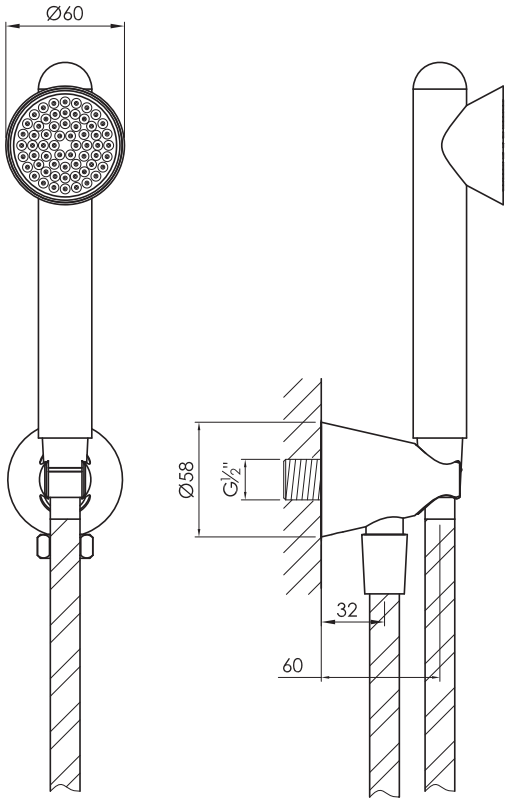



Article code:	900-6910 Brushed 900-6916 PVD coated gun metal
Material:	Stainless Steel r304
Cleaning instructions:	download JEE-O shower and taps manual on our website: www.jee-o.com
Pressure:	Recommended working pressure 3Bar
Flexhose:	150 cm length
Connection:	G ½" (ø15mm / 0.6") nylon(out)/epdm(in) flexhose with brass swivel
Thread:	British Standard Pipe (BSP)
Dimension package:	L 37 x W 28 x H 10 CM
Total weight:	1.6 kg
Package weight:	0.3 kg

7 year warranty – The general conditions can be found on our website: www.jee-o.com/downloads

HS code: 84248970

Approvals:

Models are subject to change and specs may contain typographical errors
Slight variations in the aesthetic appearance of the product, including the color, may occur after exposure to external influences such as sunlight, pollution or harmful chemicals

JEE-O cone thermostat

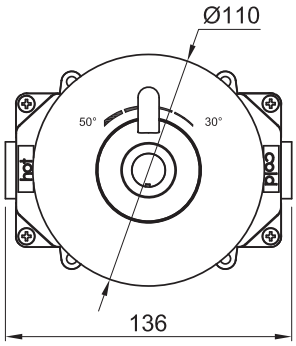

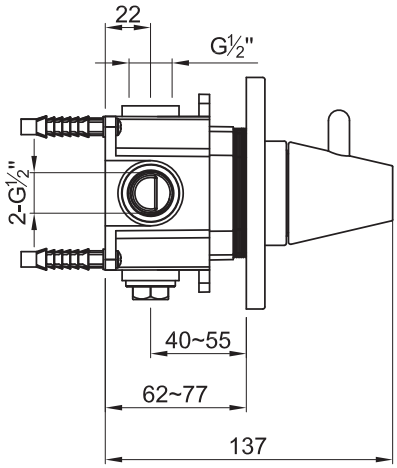



Article code:	900-2500 Brushed 900-2506 PVD coated gun metal
Material:	Stainless Steel r304
Cleaning instructions:	download JEE-O shower and taps manual on our website: www.jee-o.com
Cartridges:	Vernet mixing mechanism (thermostatic) item code 005-0501
Flow at water of 38°C:	12l p/m at 3Bar pressure
Pressure:	Recommended working pressure 3Bar

Connection:	2 x G ½" (ø15mm / 0.6")
Thread:	British Standard Pipe (BSP)
Dimension package:	L 28 x W 18 x H 16 cm
Total weight:	1.9 kg
Package weight:	0.4 kg

7 year warranty – The general conditions can be found on our website: www.jee-o.com/downloads

HS code:	84248970
Approvals:	

Models are subject to change and specs may contain typographical errors
Slight variations in the aesthetic appearance of the product, including the color, may occur after exposure to external influences such as sunlight, pollution or harmful chemicals

JEE-O cone diverter

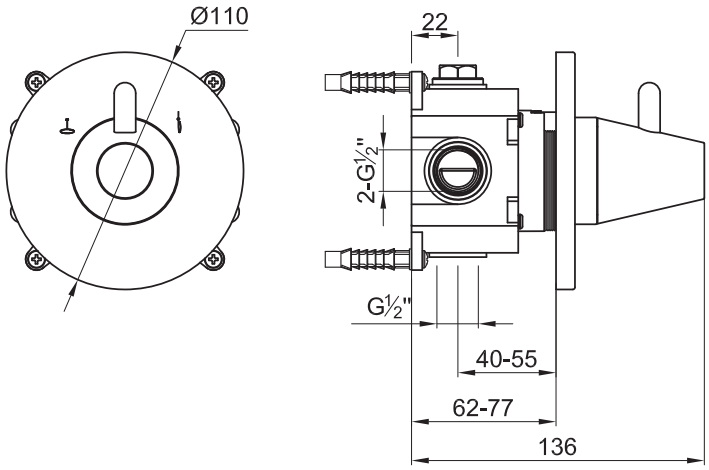



Article code:	900-2600 Brushed 900-2606 PVD coated gun metal
Material:	Stainless Steel r304
Cleaning instructions:	download JEE-O shower and taps manual on our website: www.jee-o.com
Cartridges:	Fluhs ceramic diverter mechanism item code 005-0601
Flow at water of 38°C:	11l p/m at 3Bar pressure
Pressure:	Recommended working pressure 3Bar

Connection:	2 x G ½" (ø15mm / 0.6")
Thread:	British Standard Pipe (BSP)
Dimension package:	L 25 x W 18 x H 16 cm
Total weight:	1.6 kg
Package weight:	0.3 kg

7 year warranty – The general conditions can be found on our website: www.jee-o.com/downloads

HS code: 84248970

Models are subject to change and specs may contain typographical errors
Slight variations in the aesthetic appearance of the product, including the color, may occur after exposure to external influences such as sunlight, pollution or harmful chemicals