JEE-O flow basin small

made from DADO® quartz

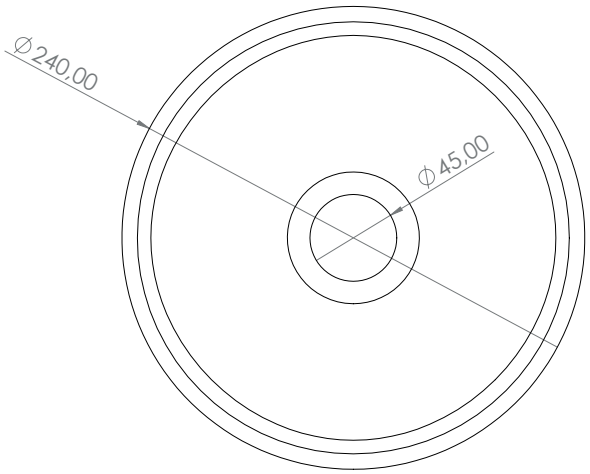

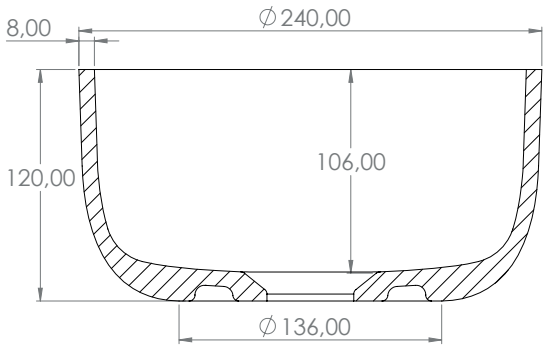







Article code:	SWMBAS119 White DADOquartz
Material:	DADOquartz - Scratch & abrasion resistant
Waste diameter:	45mm

Dimensions:	L 24 x W 24 x H 12 cm
Basin rim:	1 cm
Net weight:	2kg

Note: cast products are subject to size variation of +/-5%

Dimension package:	L 36 x W 27 x H 15 mm
Package weight:	0,7kg
Total weight:	2,3kg
UV stability:	6 / BSEN438

25 year warranty – The general conditions can be found on our website: www.jee-o.com/downloads

HS code: 68109900

CE

Models are subject to change and specs may contain typographical errors
Slight variations in the aesthetic appearance of the product, including the color, may occur after exposure to external influences such as sunlight, pollution or harmful chemicals