JEE-O slimline wall shower

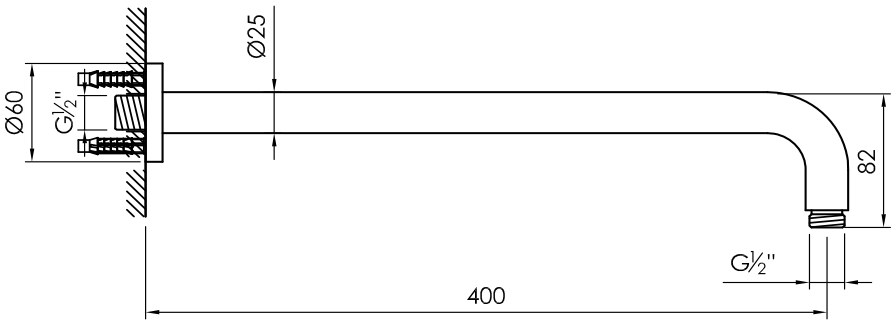



Use only in combination with JEE-O slimline shower head small

Article code:	801-6900 Brushed 801-6903 Stuctured black 801-6904 PVD coated bronze 801-6905 PVD coated matt gold 801-6909 PVD coated dark steel
Material:	Stainless Steel r304
Cleaning instructions:	download JEE-O shower and taps manual on our website: www.jee-o.com
Pressure:	Recommended working pressure 3Bar

Connection:	G ½" (ø15mm / 0.6")
Thread:	British Standard Pipe (BSP)
Dimension package:	L 52 x W 15,5 x H 6 cm
Total weight:	0.7 kg
Package weight:	0.16 kg

7 year warranty – The general conditions can be found on our website: www.jee-o.com/downloads

HS code: 84818011900

Models are subject to change and specs may contain typographical errors
Slight variations in the aesthetic appearance of the product, including the color, may occur after exposure to external influences such as sunlight, pollution or harmful chemicals

JEE-O slimline shower head small

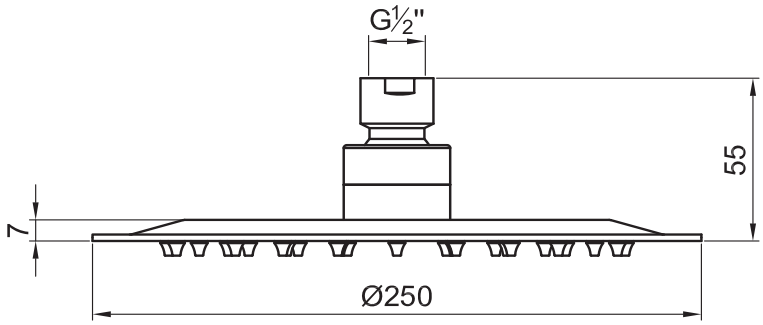





Article code:	800-6120 Brushed 800-6123 Stuctured black 800-6124 PVD coated bronze 800-6125 PVD coated matt gold 800-6129 PVD coated dark steel
Material:	Stainless Steel r304
Cleaning instructions:	download JEE-O shower and taps manual on our website: www.jee-o.com
Nozzles:	91 p. brushed version: grey colored versions: black
Flow at water of 38°C:	12l p/m at 3Bar pressure
Pressure:	Recommended working pressure 3Bar

Connection:	G ½" (ø15mm / 0.6")
Thread:	British Standard Pipe (BSP)
Dimension package:	27 x 26 x 7 cm
Total weight:	1,04 kg
Package weight:	0,84 kg

7 year warranty – The general conditions can be found on our website: www.jee-o.com/downloads

HS code:	84818011900

Models are subject to change and specs may contain typographical errors
Slight variations in the aesthetic appearance of the product, including the color, may occur after exposure to external influences such as sunlight, pollution or harmful chemicals

JEE-O slimline wall hand shower

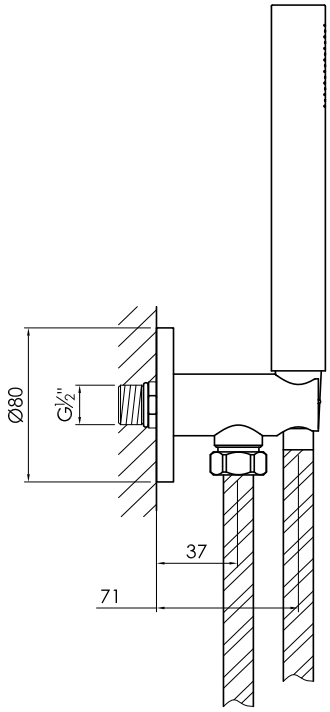



Article code:	800-6910 Brushed 800-6913 Stuctured black 800-6914 PVD coated bronze 800-6915 PVD coated matt gold 800-6919 PVD coated dark steel
Material:	Stainless Steel r304
Cleaning instructions:	download JEE-O shower and taps manual on our website: www.jee-o.com
Pressure:	Recommended working pressure 3Bar

Connection:	G ½" (ø15mm / 0.6")
Thread:	British Standard Pipe (BSP)
Dimension package:	L 26 x W 14 x H 8 cm
Total weight:	1.1 kg
Package weight:	0.1 kg

7 year warranty – The general conditions can be found on our website: www.jee-o.com/downloads

HS code:	84818011900
Approvals:	

Models are subject to change and specs may contain typographical errors
Slight variations in the aesthetic appearance of the product, including the color, may occur after exposure to external influences such as sunlight, pollution or harmful chemicals

JEE-O slimline valve

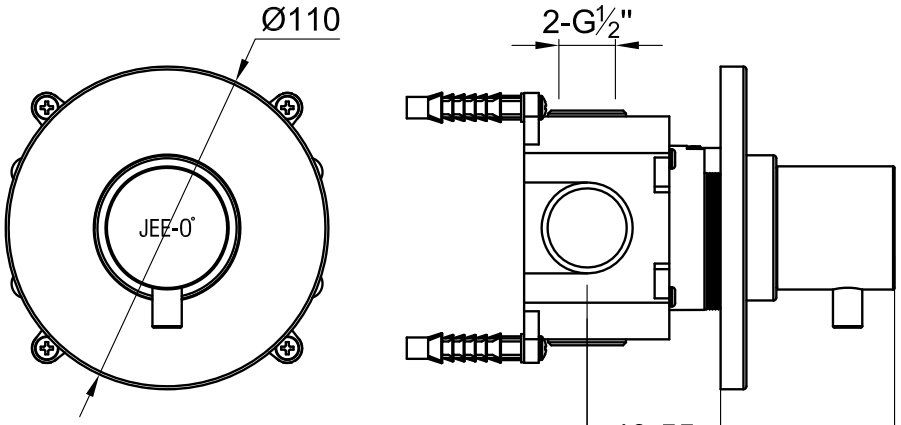



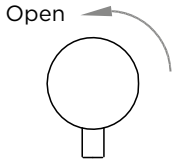





Article code:	800-2700 Brushed 800-2703 Stuctured black 800-2704 PVD coated bronze 800-2705 PVD coated matt gold 800-2709 PVD coated dark steel
Material:	Stainless Steel r304
Cleaning instructions:	download JEE-O shower and taps manual on our website: www.jee-o.com
Cartridge:	Fluhs ceramic valve, item code 005-0602
Flow at water of 38°C:	10L p/m at 3bar pressure
Pressure:	Recommended working pressure 3Bar

Connection:	2 x G ½" (ø15mm / 0.6")
Dimension package:	L 26 x W 18 x H 18 cm
Total weight:	1.7 kg
Package weight:	0.448 kg

7 year warranty – The general conditions can be found on our website: www.jee-o.com/downloads

Models are subject to change and specs may contain typographical errors
Slight variations in the aesthetic appearance of the product, including the color, may occur after exposure to external influences such as sunlight, pollution or harmful chemicals

JEE-O slimline thermostat

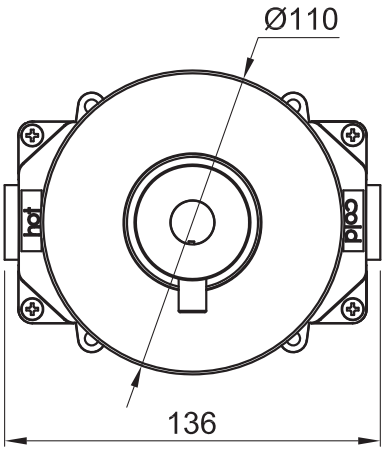

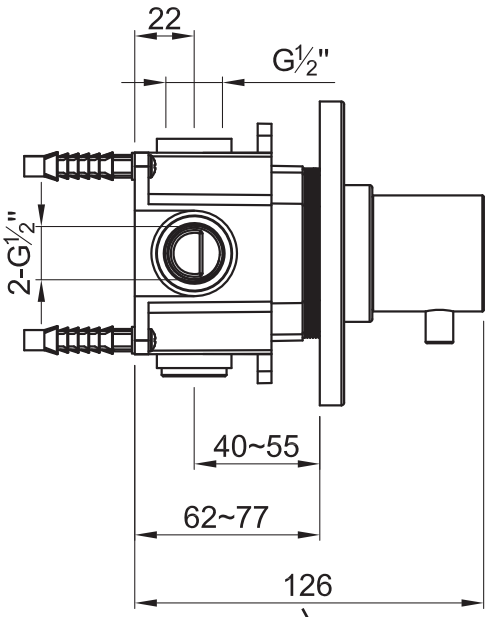



decrease temparature

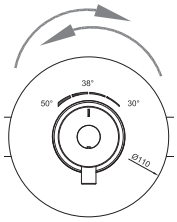

increase temparature





Article code:	800-2500 Brushed 800-2503 Stuctured black 800-2504 PVD coated bronze 800-2505 PVD coated matt gold 800-2509 PVD coated dark steel
Material:	Stainless Steel r304
Cleaning instructions:	download JEE-O shower and taps manual on our website: www.jee-o.com
Cartridge:	Vernet mixing mechanism (thermostatic), item code 005-0501
Flow at water of 38°C:	12L p/m at 3Bar pressure
Pressure:	Recommended working pressure 3Bar

Connection:	3 x G ½" (ø15mm / 0.6")
Dimension package:	L 26 x W 18 x H 18 cm
Total weight:	2.17 kg
Package weight:	0.564 kg

7 year warranty – The general conditions can be found on our website: www.jee-o.com/downloads

HS code:	84818011
Approvals:	

Models are subject to change and specs may contain typographical errors
Slight variations in the aesthetic appearance of the product, including the color, may occur after exposure to external influences such as sunlight, pollution or harmful chemicals