JEE-O

Slimline electronic wall mounted basin tap stainless steel, with Infrared on/off sensor and concealed controlbox

Slimline elektronische wand wastafel kraan rvs, met infrarood aan/uit sensor en inbouwbox

800-1540 / 800-1543 / 800-1544 / 800-1545

installation

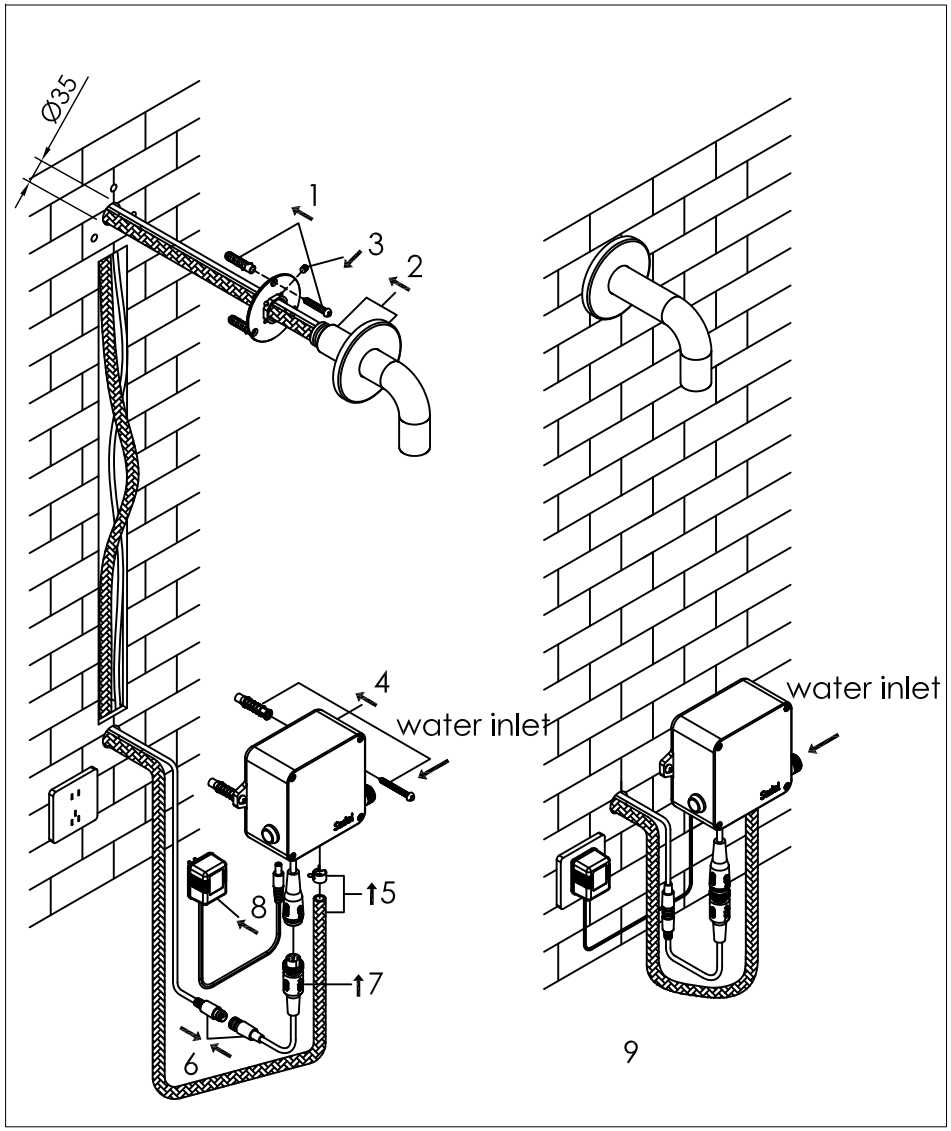

9

technical diagram

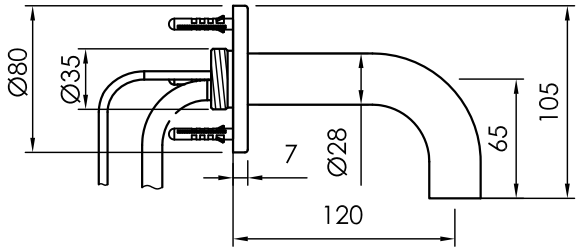

explosion diagram

Note:
1, close the water supply and power supply before installation
2, install the control box in the upright position as shown in the diagrams
3, choose an accessible place to install the control box for future service purposes
4, ensure a minimum of 200mm between the spout and the bottom of the basin
5, the detection distance of the sensor can be adjusted (see manual on www.jee-o.com)

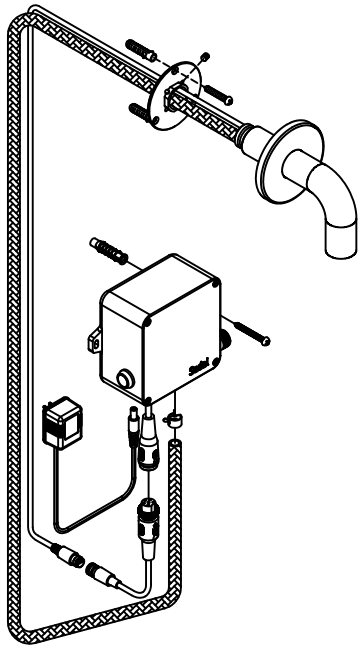

020-xxx-24xx

www.jee-o.com